Diritti riservati All rights reserved

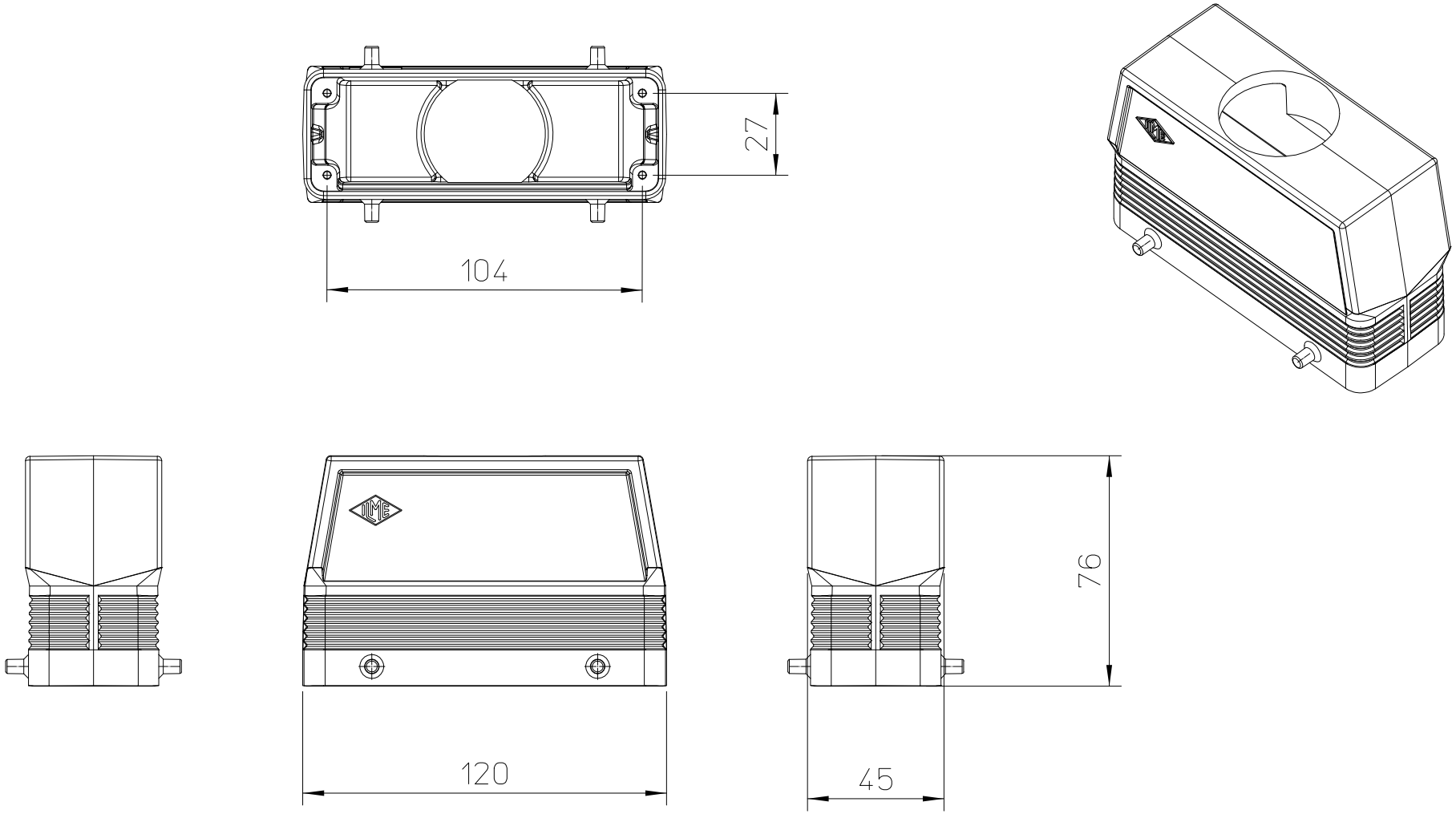

dimensions in mm	MFV 24.40	Scale	
Date 26/10/16	Hood, with M40 entry	1:2	ILME
Sign. C. Mainini			